Cheetah

INTERFACE

for the Blinder M27 / M47

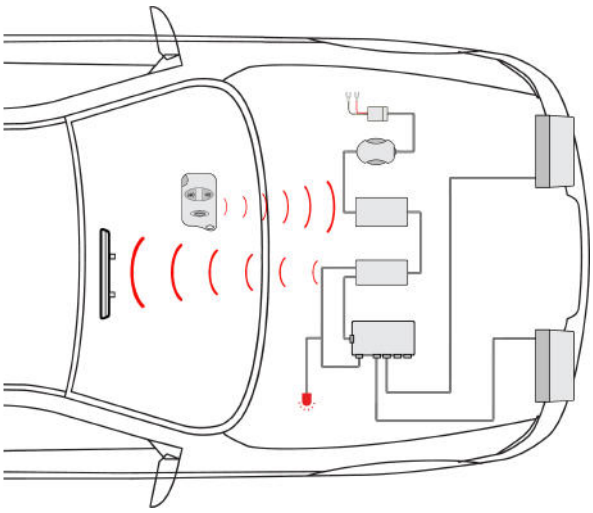

THIS INTERFACE IS COMPATIBLE WITH

Cheetah C100 Cheetah GPSmirror

1. Welcome

Thank you for purchasing this laser jammer interface for your Cheetah GPS detector.

Our unique LASERnode transmitter makes your jammer wireless so you can link it up with your Cheetah, as well as installing and powering it directly in the engine bay, without any tricky hardwiring, difficult cable runs or drilling holes in the engine firewall or dashboard.

I'm sure it will save you a lot of time and hassle.

Your sincerely,

Al Smith, Director, Cheetah Advanced Technologies Ltd.

2. Pack Contents

Engine bay Components
1 x In-line fuse unit (3 Amp)
1 x POWERSENSEnode engine running sensor
1 x STEALTHnode remote controlled relay switch
1 x LASERnode wireless transmitter
1 x Cheetah connector cable for the Blinder M27

Inside the car
1 x Keyfob remote controller
1 x User manual

Please note, this wireless kit will replace the piezo buzzer and power cable that were supplied with your original jammer system. We recommend you store them in a safe place.

3. Important Information

Blinder M27 parking sensor function is disabled
The connector cable supplied with this kit does not enable the parking sensor function to operate. It ONLY allows jamming.

If you wish to retain the "parking sensor," we can make an alternative cable to order ($24.99) that uses the Blinder 3- way switch. Email ***support@SpeedCheetah.com*** for details.

4. Required Changes in Blinder Software

1. Blinder start up tones - Disable Blinder start up tones or the wireless fitting kit will not function correctly.

2. Jam time - We recommend setting the jam time feature to "Constant Jamming."

3. Alarm time after jamming - We recommend setting the "Alarm Time After Jamming" to 1 second.

5. Overview of main components

Cheetah parts are connected using our 2-pin mini connectors which push-fit together and lock securely. Unclip them by pressing the lever down and gently pulling apart.

1.1 POWERSENSEnode - a clever "engine running" sensor that turns on power when you start the car & turns it off when you stop the engine. It's an ignition switched supply without hardwiring.

1.2 STEALTHnode - a remote controlled switch that is de-activated by the keyfob kill switch. It's default setting is ON.

1.3 LASERnode - a wireless transmitter (433 Mhz) that sends a signal to the in-car warning unit whenever your jammer alerts. The small flying lead with half a bullet connector at the end (plastic sheathed) is an over-ride cable for connecting to a Cheetah Radar Detector Interface in motorcycle installations.

Warranty & Support

Warranty Registration
Register online at ***www.SpeedCheetah.com***

Limited Warranty
Cheetah Advanced Technologies Ltd. warrant our products against all defects in materials and workmanship for a period of **one year** from the date of the original purchase. Full warranty terms and conditions available online at:
www.SpeedCheetah.com

Service & Support
If for any reason your Cheetah product develops a fault, please check our Customer Service page on:

USA & Canada - visit ***www.GPSdetector.com***

Europe & Rest of World - visit ***www.SpeedCheetah.com***

If any problems persist, or to arrange a product return, please email ***support@SpeedCheetah.com***

Cheetah Advanced Technologies Ltd. declares that this product is in compliance with the essential requirements and other relevant provisions of Directive 1999/5/EC.

This device complies with Part 15 of the FCC Rules. Operation is subject to the following two conditions: (1) this device may not cause harmful interference, and (2) this device must accept any interference received, including interference that may cause undesired operation.

© 2009 Cheetah Advanced Technologies Ltd, Scotland. All rights reserved.

Cheetah

Laser Jammer INTERFACE

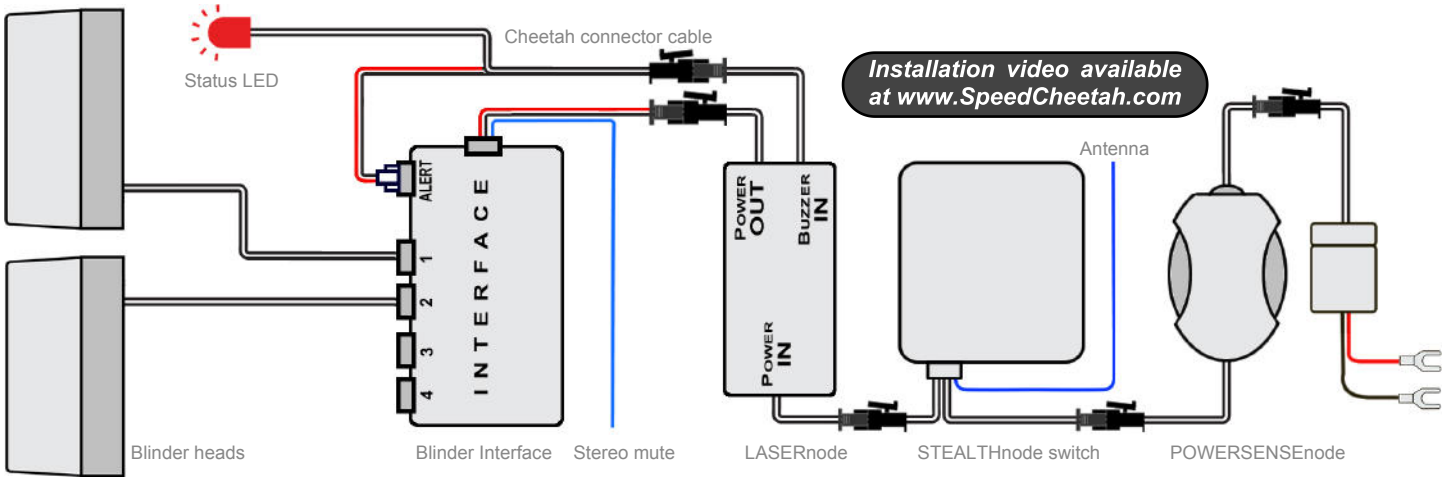

6. Installing the jammer in the engine bay

6.1 Decide on a safe location to mount the Cheetah components and Blinder Interface. Try high up to the side of the engine bay, as close to the windshield and as far from the engine as possible. The LASERnode is weatherproof, Blinder interface is not.

6.2 When routing your cables, remember to secure them with the cable ties provided in the original jammer system. Cables must not come into contact with any engine part that generates high heat, e.g. the radiator, exhaust system or engine block.

6.3 Attach the in-line fuse unit to the car battery terminals. RED is positive, BLACK is negative. There is no need to remove the leads from the battery. Just loosen the nut on the clamp, slide in the spade terminal, and re-tighten the nut.

6.4 **Some cars do not have the battery in the engine bay.** If your car has "jump start" points in the engine, just connect the POWERSENSEnode to them and it should function properly.

IMPORTANT: If you have to hardwire power from a fused, ignition switched supply you must remove the POWERSENSE-node and connect the fuse pack directly to the LASERnode.

6.5 The fuse unit connects to 1) the POWERSENSEnode, then 2) the STEALTHnode and 3) the LASERnode, which uses 4) the Cheetah connector cable to connect to your jammer in two places:
- **the buzzer** - to digitally analyze jammer tones during alerts,
- **the power socket** - to sense voltage changes during alerts.

Using BOTH the Power OUT and Buzzer IN connectors on the LASERnode is essential.

6.6 Install the jammer head(s) as described in their manual. Run their cables safely back to the CPU and plug them in.

6.7 If you are at all concerned about water damage to the Blinder CPU, please place it inside some sort of waterproof enclosure or plastic bag.

6.8 The keyfob can be placed anywhere you like inside the car provided its transmissions can reach the STEALTHnode switch. For convenience, we recommend using a Velcro square to mount it within easy reach on your dash.

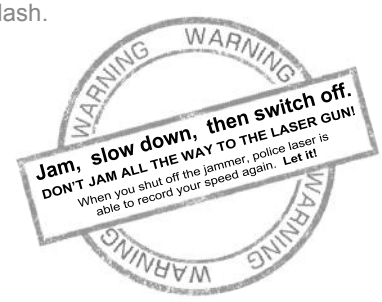

7. Retro-fit to a pre-installed jammer

If you already have a laser jammer installed in your car you can still link it up with your GPS detector.

7.1 Remove the POWERSENSEnode and STEALTHnode and connect the LASERnode transmitter directly to the fuse unit.

7.2 Cut the spade terminals off the fuse unit and connect it to the existing power cable that is supplying your laser jammer.

7.3 Using the Cheetah cable, connect the LASERnode to your jammer's CPU in two places - the buzzer socket and the power socket. As before, **using BOTH the Power OUT and Buzzer IN connectors on the LASERnode is essential.**

8. Using your wireless jammer

8.1 Switching ON your system

Your jammer system will only power up when you start the engine. When the LASERnode transmitter is first switched on, it sends out a "Communication Check" signal (CC signal) to the GPS detector, making it switch on its red wireless link LED. This shows the wireless connection is established.

8.2 Receiving a jammer alert

The GPSmirror or C100 will give a voice announcement, then beep and flash whenever it receives the wireless alerts sent out by the LASERnode transmitter. These alerts will last for the same amount of time as the original piezo buzzer would have sounded for.

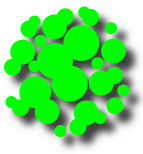

8.3 Switching OFF your system

THE KEYFOB CAN BE USED TO TURN THE LASER SYSTEM OFF AND ON WHENEVER THE ENGINE IS RUNNING.

When you switch off your engine, power to the LASERnode transmitter and the jammer is automatically cut off, so you won't get a flat battery. Please note that when you switch the Blinder off, either automatically with the engine or manually using the keyfob, the red wireless link LED on the GPS detector will not switch off immediately. The detector will switch off its LED only after it fails to receive 2 missed CC signals. Please visit the Customer Service > Laser Jammer Interface FAQs section of ***www.SpeedCheetah.com*** for more information on this point.

USER TIP: The Cheetah connector cable has a status LED that operates in the same way as the LED of the original jammer system. This is useful for confirming the jammer and kill switch are working correctly. It can even be mounted at the bottom of the windshield as a secondary warning confirmation.